DRIVE TRAIN, PROP SHAFT, MID - Z26S4D92AN/AH/BN/BH (C750263)

2026 RZR - RZR PRO S4 ULTIMATE (R01) - Z26S4D92AN/AH/BN/BH

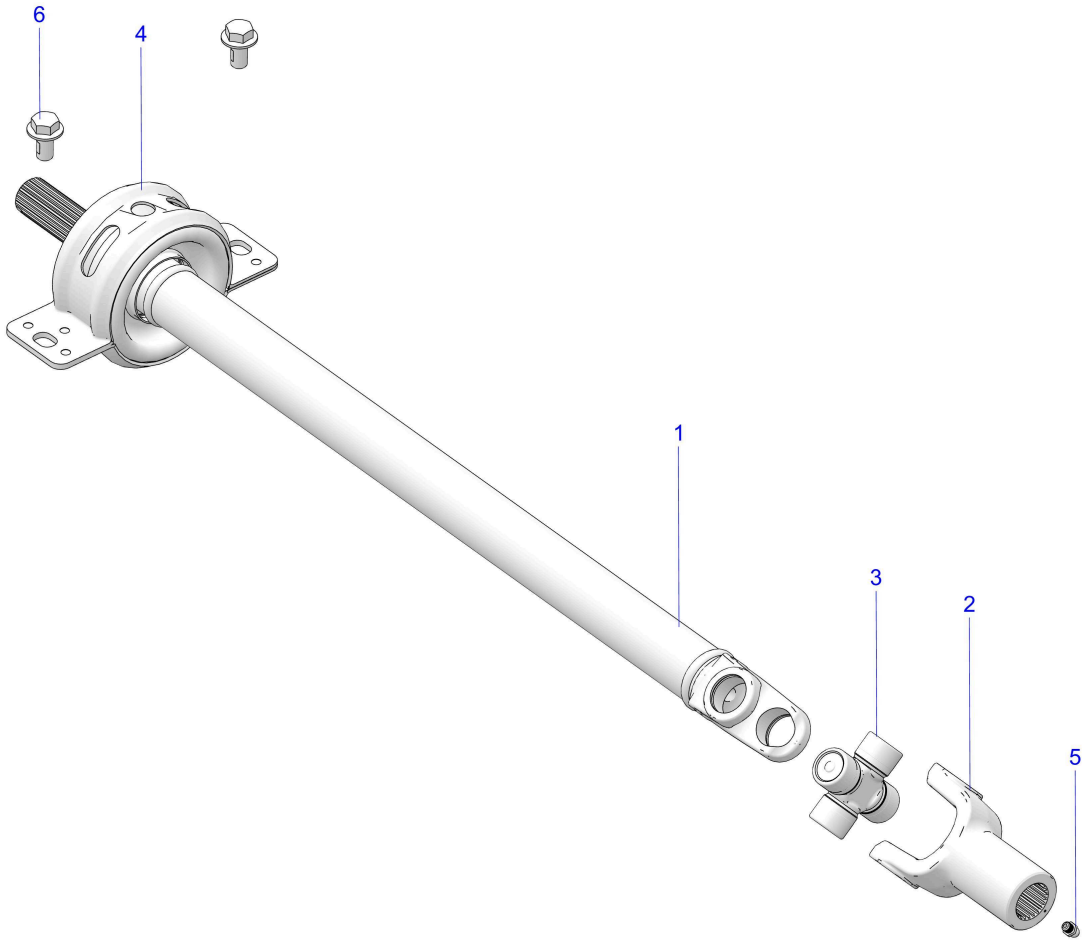

© 2023 Polaris Industries Inc.

C750263

Reference #	*Part#*	*Description*	*Quantity*
1	1334601	ASM-PROPSHAFT,MID,W/BEARING [INCL. 2-5]	1
2	3239321	YOKE, SLIP	1
3	2207308	U-JOINT	1
4	1026065	ASM-BRKT,MID PROP MNT	1
5	7080424	FITTING-LUBRICATION 1/4-28	1
6	7518460	SCR-HXFL-M10X1.5X20 8.8 Z NYL	2

Copyright 1996-2026 Polaris Industries U.S.A All rights reserved.